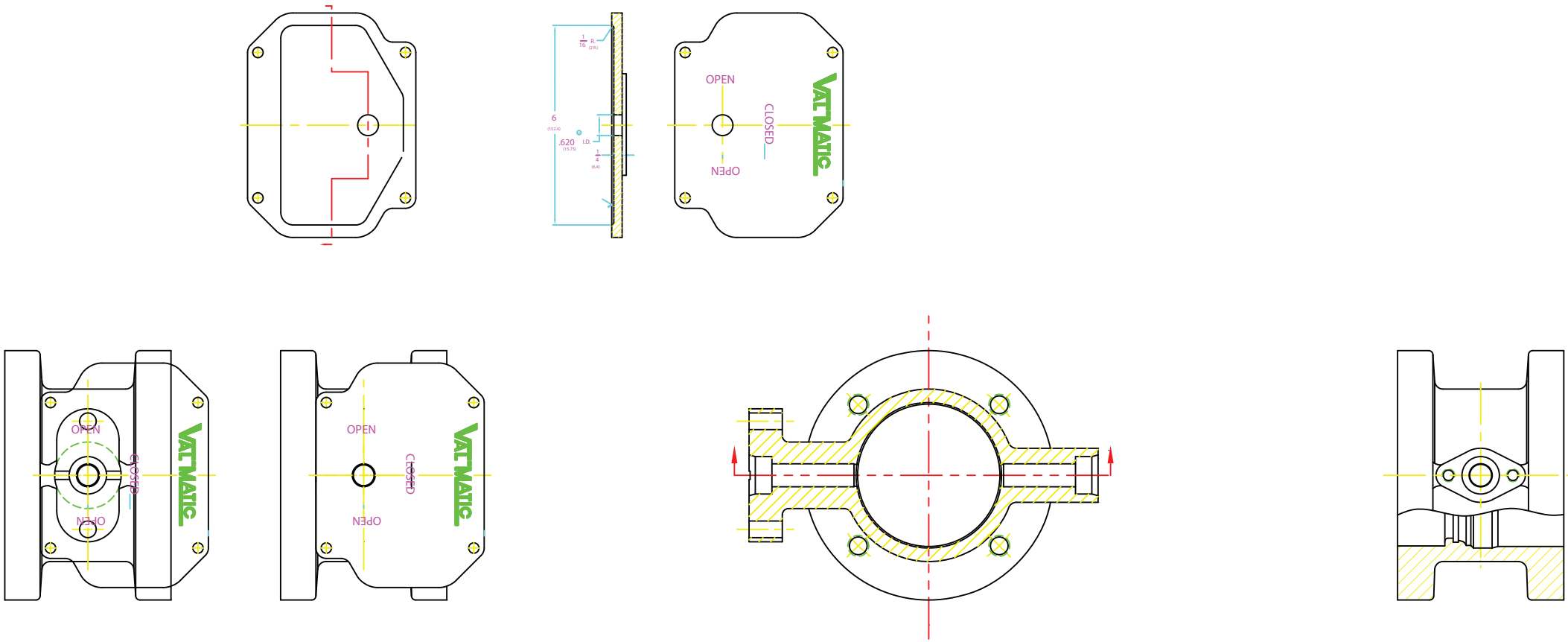
OPEN
CLOSED
OPEN
VATMATIC
OPEN
CLOSED
OPEN
VATMATIC
OPEN
CLOSED
OPEN
VATMATIC