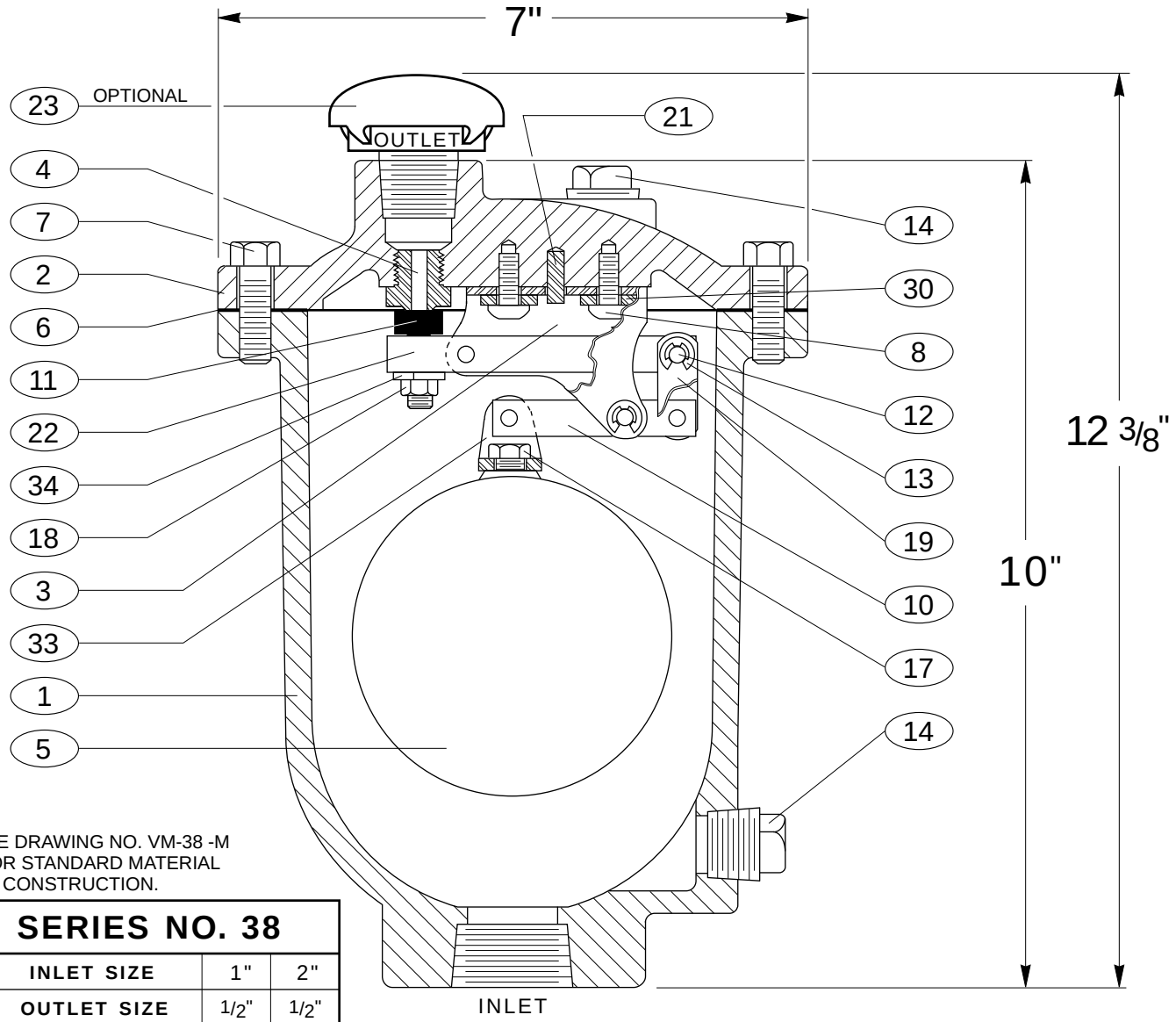

SEE DRAWING NO. VM-38 -M
FOR STANDARD MATERIAL
OF CONSTRUCTION.

TEST PRESSURE
1.5 TIMES COLD WORKING PRESSURE-CWP

SERIES NO. 38				
INLET SIZE			1"	2"
OUTLET SIZE			1/2"	1/2"
WORKING PRESSURE	150 P.S.I. C.W.P.	MODEL NO. *	38	38.2
		ORIFICE SIZE	3/16"	3/16"
	300 P.S.I. C.W.P.	MODEL NO. *	38.5	38.6
		ORIFICE SIZE	5/32"	5/32"
	400 P.S.I. C.W.P.	MODEL NO. *	38HP	38HP.2
		ORIFICE SIZE	1/8"	1/8"

*Add "H" to Model No. for optional screened hood SPK-5H.

1	BODY	8	RETAINING SCREW	18	LOCK NUT
2	COVER	10	FLOAT ARM	19	LINK
3	LEVER FRAME	11	ORIFICE BUTTON	21	LOCATING PIN
4	SEAT	12	PIVOT PIN	22	ORIFICE BUTTON ARM
5	FLOAT	13	RETAINING RING	23	SCREENED HOOD
6	GASKET	14	PIPE PLUG	30	WASHER
7	COVER BOLT	17	FLOAT RETAINER	33	CLEVIS
				34	LOCK WASHER

Revised 4-13-04

AIR RELEASE VALVE	DATE 4-1-69
VAL-MATIC® VALVE AND MANUFACTURING CORP.	DRWG. NO. VM-38