5EP ELECTRIC PANEL
PUMP CONTROL SYSTEM
WIRING DIAGRAM

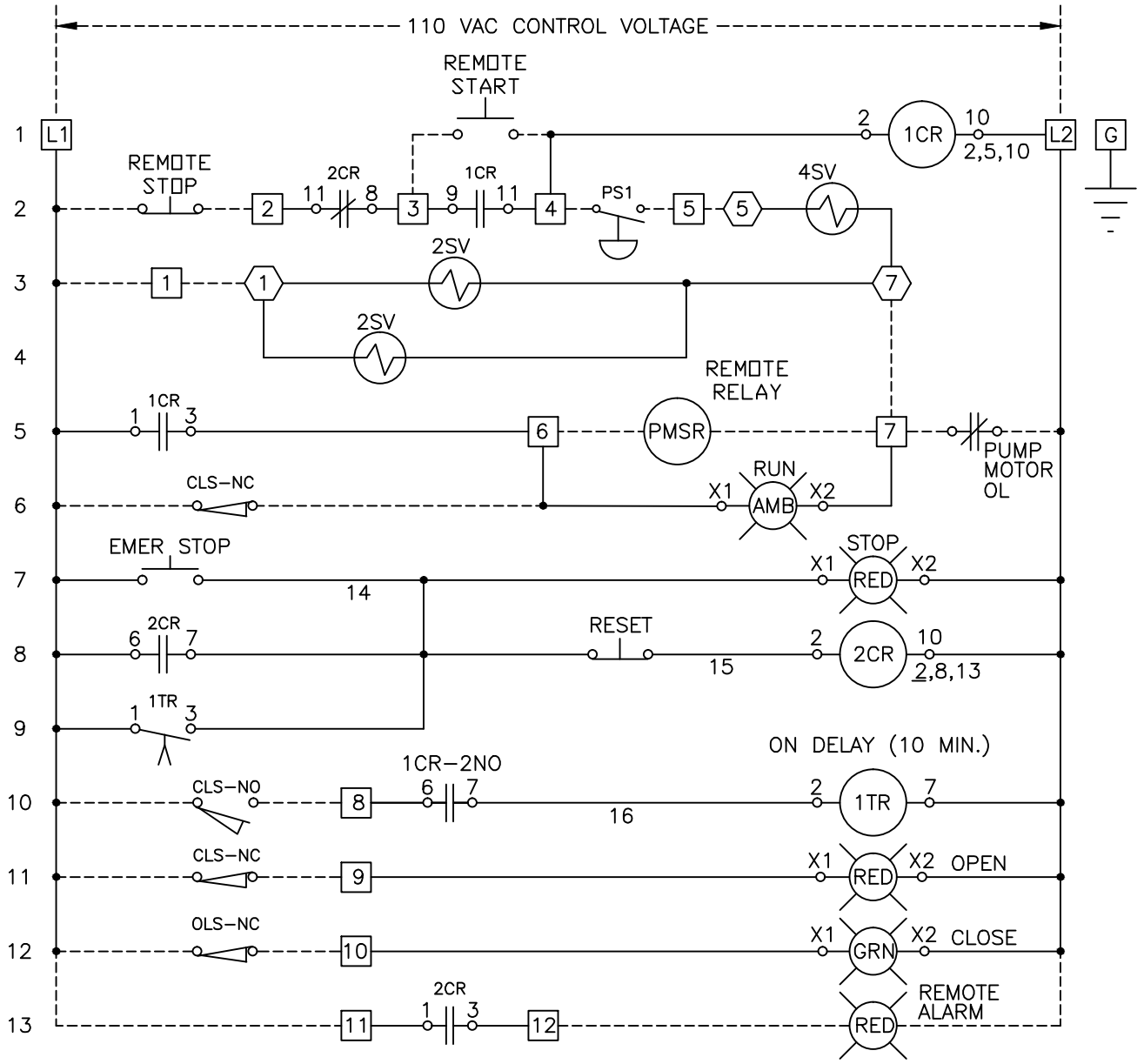

FOR SEQUENCE OF OPERATION, SEE DRAWING SS-2304

☐ TERMINALS IN ELECTRIC PANEL, 5EP

⬡ TERMINALS IN HYDRAULIC PANEL, 5HP

---- FIELD WIRING

Revised 7-6-10

ELECTRIC PANEL PUMP CONTROL SYSTEM WIRING DIAGRAM	DATE 6-26-08
VAL-MATIC VALVE AND MANUFACTURING CORP.	DRWG. NO. SSC-2303